[Unit : mm]

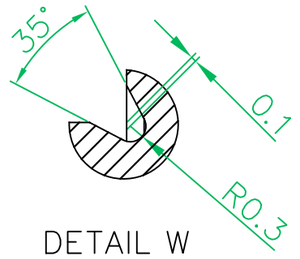

DETAIL W
SCALE 6:1

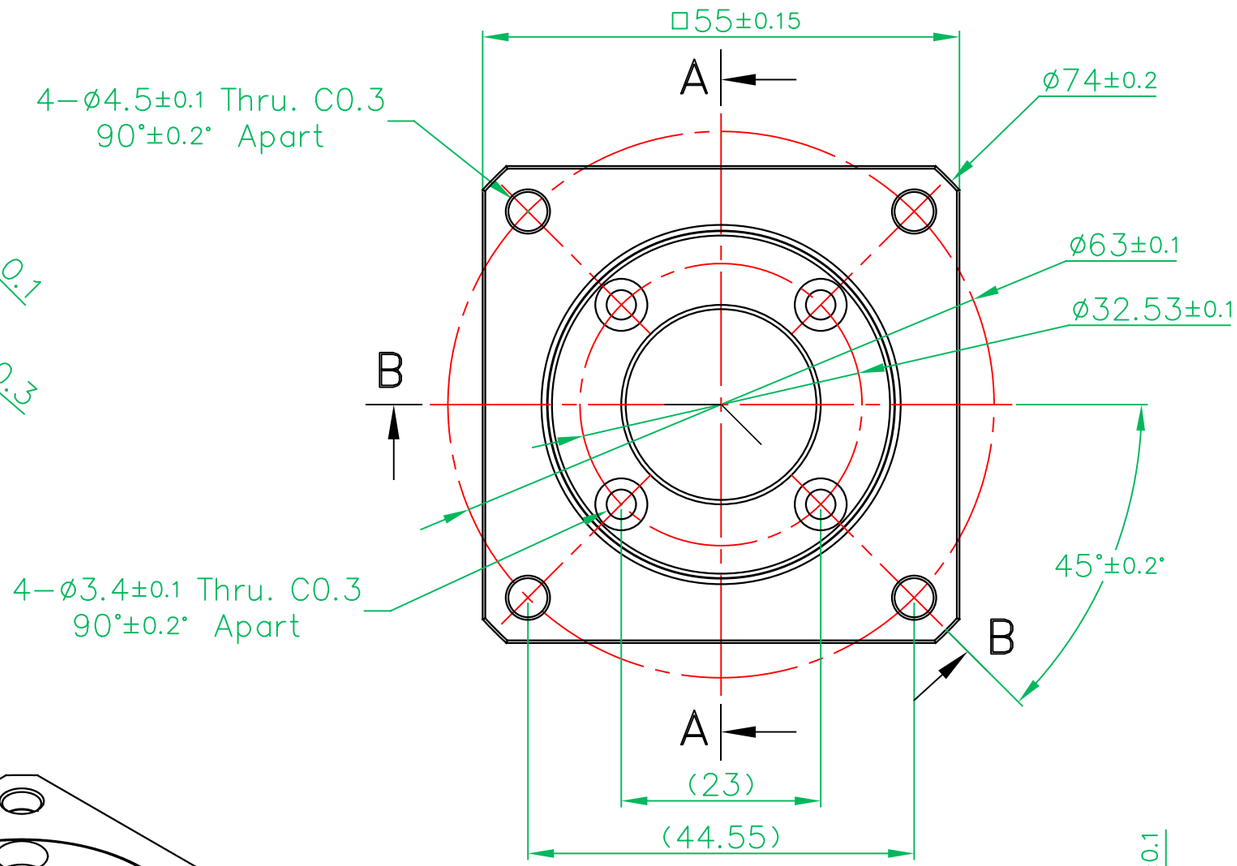

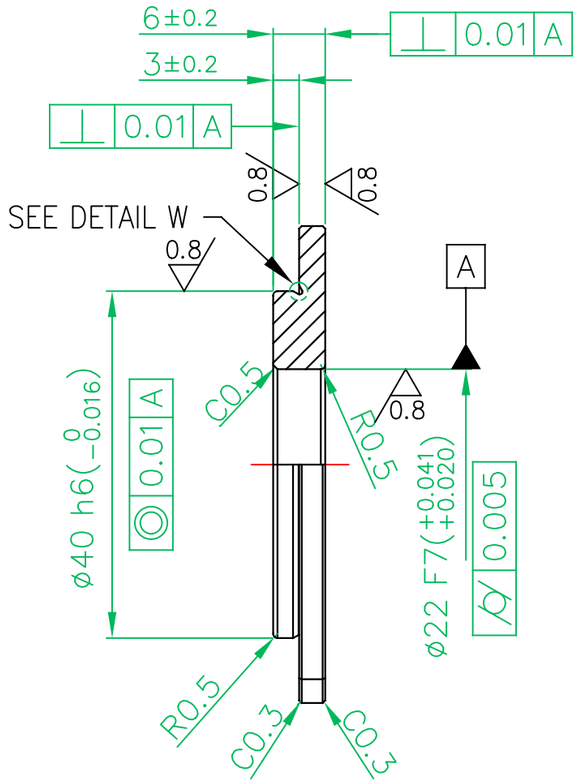

SECTION A−A

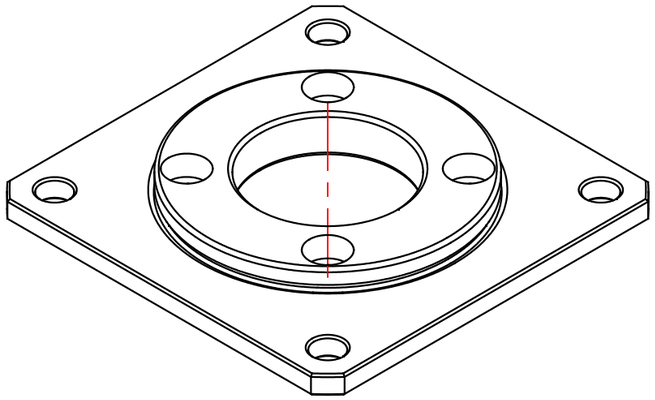

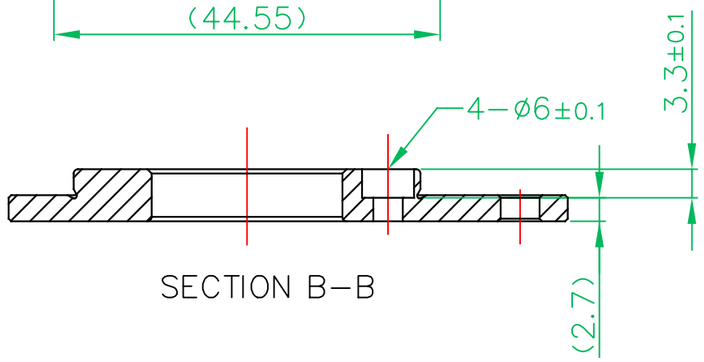

SECTION B−B

A6061	T6	60±5HRB	
Material	Heat Treatment	Hardness	Note
DATE	2025/5/01	TITLE Conjunction Plate For CM1−11L/S	
SCALE	1:1		
SIZE	A4	DWG NO. CM−CJPLATE−11	Rev. 1
3RD ANGLE PROJECTION		MUSCLE CORPORATION	