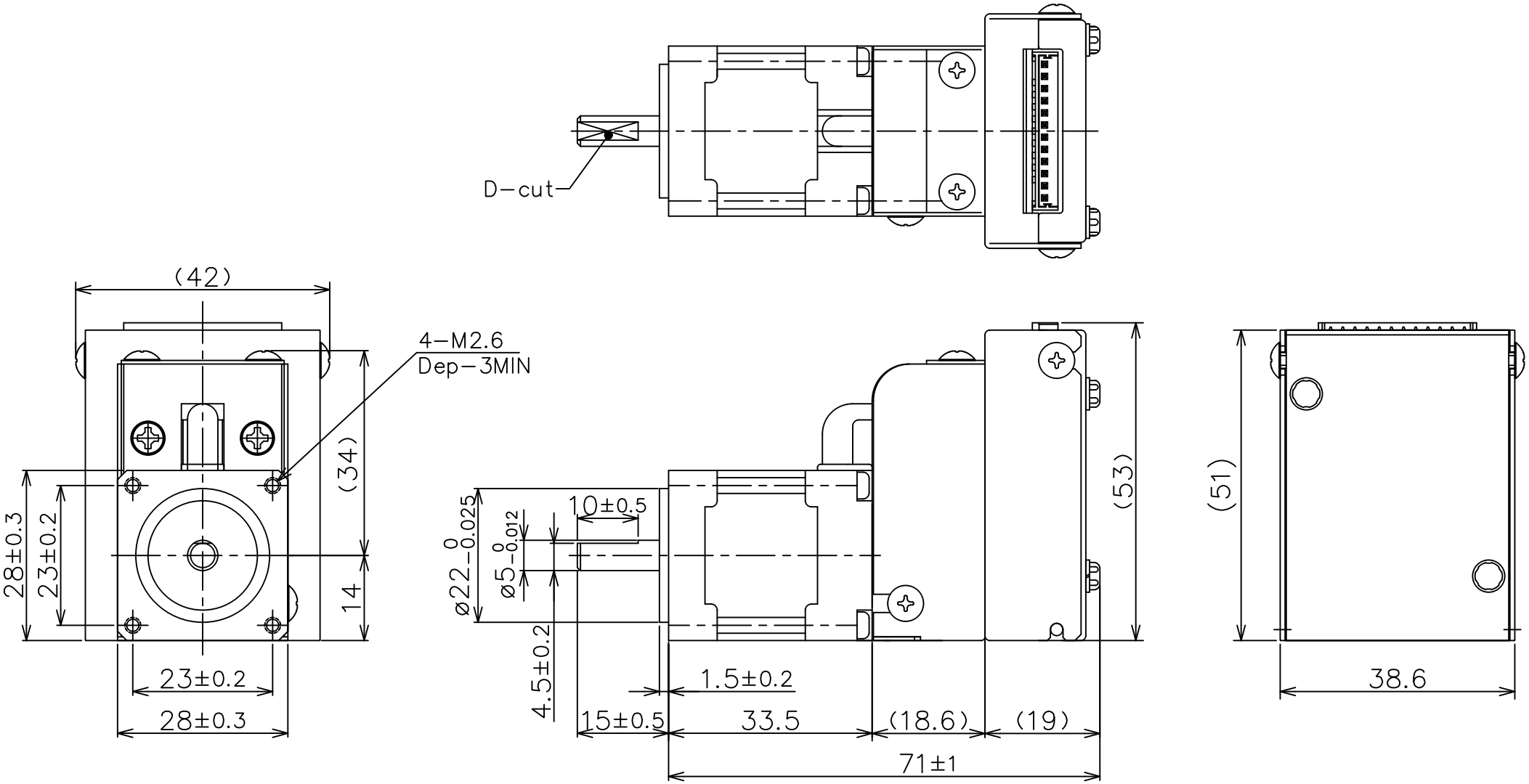
D−cut
(42)
4−M2.6
Dep−3MIN
(34)
28±0.3
23±0.2
14
23±0.2
28±0.3
10±0.5
ø22 0 −0.025
ø5 0 −0.012
4.5±0.2
1.5±0.2
15±0.5
33.5
(18.6)
(19)
71±1
(53)
(51)
38.6