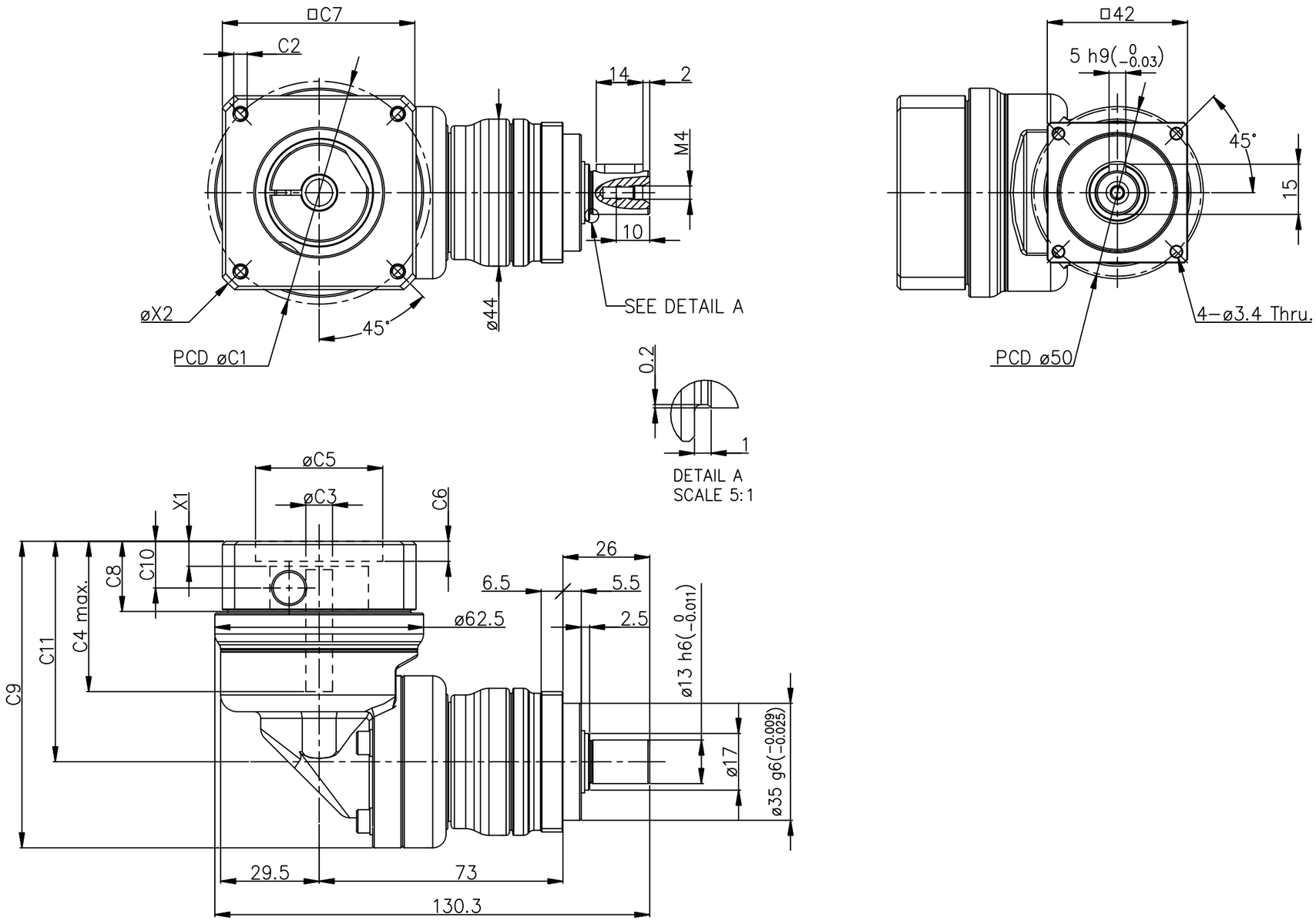

CM No.#		Conjunction Plate	Applicability By Ratio						Dimension [Unit : mm]												
			3	4	5	7	9	10	C1	C2	C3	C4	C5	C6	C7	C8	C9	C10	C11	X1	X2
CM1	11L30□	○							63	4−M4	8 max	42	40	4	58	18	88.8	11	63	4.5	74
	11S30□																				
	17L30□																				
	17S30□																				
	23L20□	—							66.675			45	38.15	6		21	91.8	14	66	7.5	77
	23S30□																				
CM2	56B10□																				
	56B20□																				
	60A10□	—							70	4−M5		42	50	4	60	18	88.8	11	63	4.5	78
	60A20□						—	—													
	60A40□					—	—	—			14 max	55		12	66	29.5	100.3	22.5	74.5	16	88

Date	2015.05.15	Title	Cool Muscle Gear 1−stage CM−PA2R042
Scale	1 : 1		
Size	A2	Dwg No.	CMPA2R421−10
3RD Angle Projection		MUSCLE CO., LTD.	