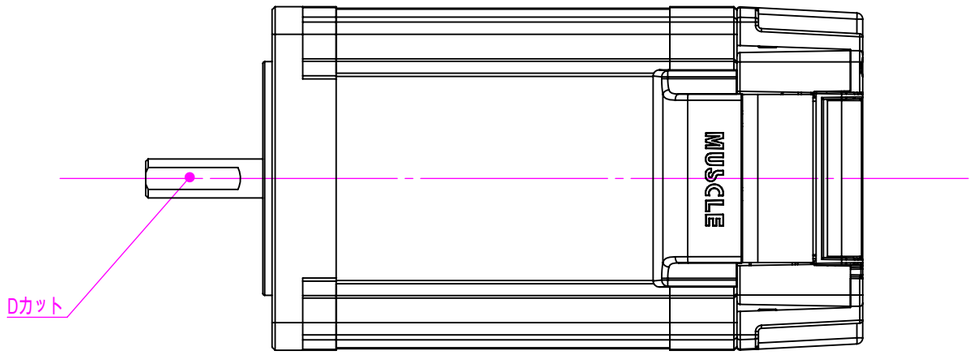
MUSCLE
Dカット

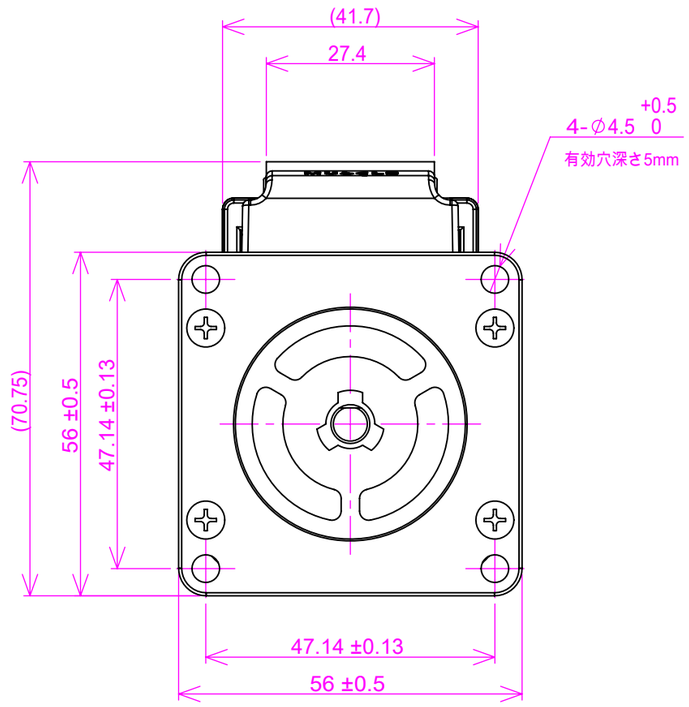
(41.7)
27.4
4-∅4.5 +0.5 0
有効穴深さ5mm
(70.75)
56 ±0.5
47.14 ±0.13
47.14 ±0.13
56 ±0.5

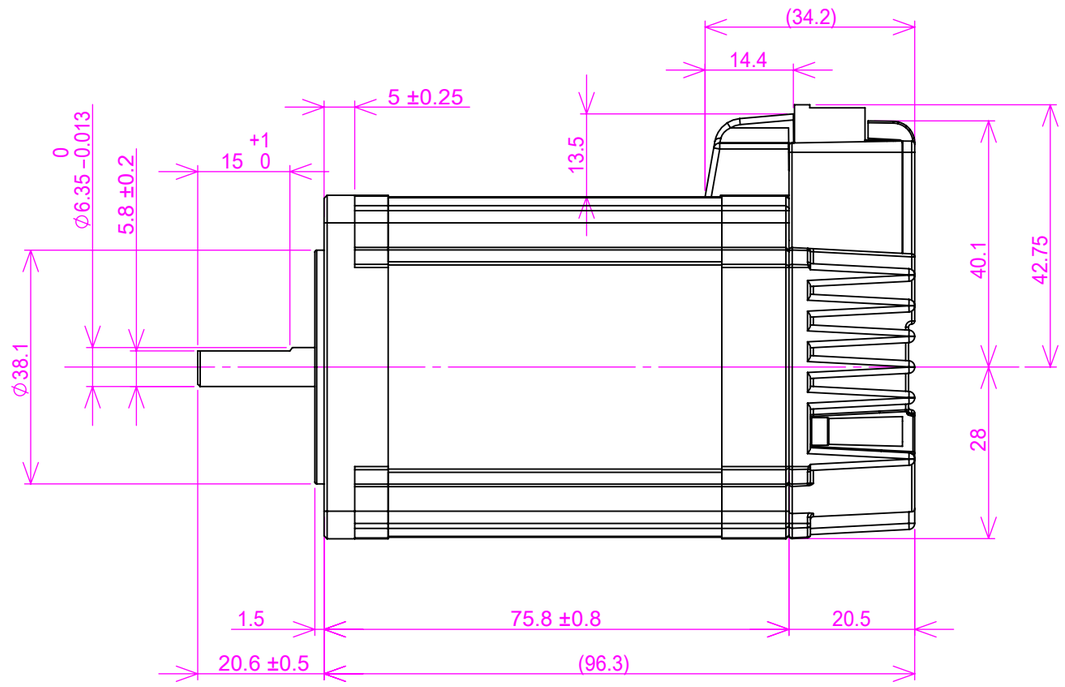
(34.2)
14.4
5 ±0.25
13.5
∅6.35 0 -0.013
5.8 ±0.2
15 +1 0
∅38.1
40.1
42.75
28
1.5
75.8 ±0.8
20.5
20.6 ±0.5
(96.3)