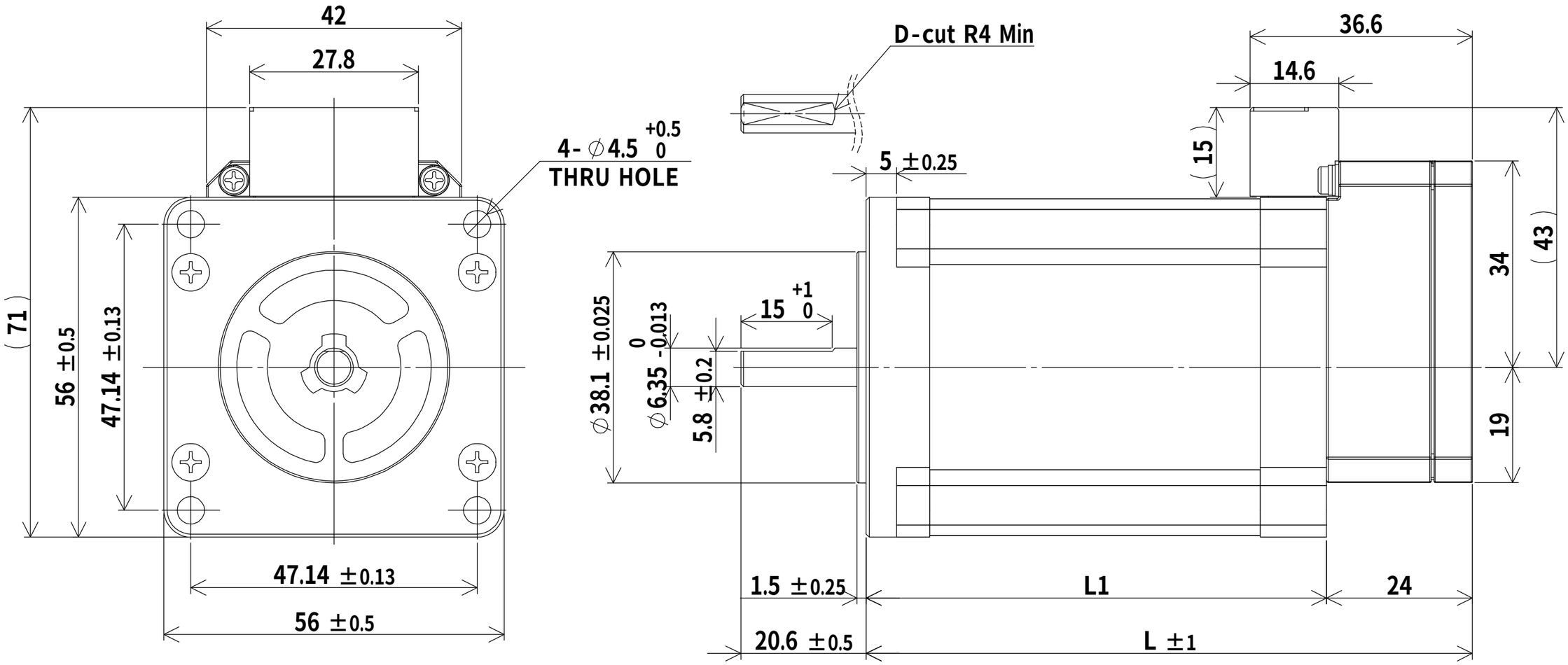

Model Name	L1	L
CM1-□-23L20C	76	100
CM1-□-23S30C	42	66